www.carburetor-parts.com

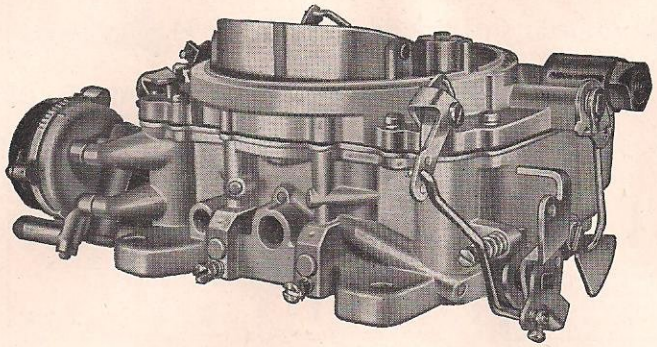

FORD "V-8"

MODELS

"FAIRLANE", "FAIRLANE 500", "CUSTOMLINE", "CUSTOMLINE 300", "STATION WAGON" AND "POLICE INTERCEPTOR" (Optional)

1957

(312 Cu. In. Engine)

AFB Four-Bore Down-Draft Climatic® Control **Carbureters Nos. 2441S-2441SA**

CARBURETER SPECIFICATIONS

For Ford 8 Cylinder Engine: 3.80 Inch Bore, 3.44 Inch Stroke

Dimensions: Flange, four bore—4 bolt type.
Throttle bore 1-7/16 inch I. D.
Primary venturi size, 11/32 inch I. D.
Main Venturi 1-1/16 inch I. D.

Vents: Inside (2) in air horn; Outside (4) in body.

Gasoline Intake: Size No. 38 (.1015 inch) drill hole in needle seat.

Low Speed Jet Tube: (In venturi assembly, primary side only).
Jet, size No. 68 (.031 inch) drill.
By-pass, size No. 53 (.0595 inch) drill.
Economizer, size (.049 inch) diameter.
Idle bleed, size No. 51 (.067 inch) drill.

Idle Port: (Upper) slot type. Primary, length .230 inch; width .030 inch. Secondary, none.

Idle Port Opening: Primary, .187 to .193 inch above top edge of valve with valve tightly closed. Secondary, none.

Lower Port: Primary (for idle adjustment screw), size early prod. .0635 inch, intermediate prod. .065 inch, late prod. .076 inch.

Set Idle Adjustment Screw: 1/2 to 1 1/2 turns open. For richer mixture turn screw out. Idle engine between 475 to 500 r.p.m (all trans.) in neutral.

Main Nozzle: Installed permanently. DO NOT REMOVE. Anti percolator bleed, primary, (tube in venturi assembly) size No 71 (.026 inch) drill. Secondary, (drilled hole in venturi assembly) size No. 60 (.040 inch) drill.

Step-Up Rod: (Vacumeter type) see parts list for size.

Metering Jet: Primary, size .0935 inch diameter (for step-up rod).
Secondary, size .0635 inch diameter (no step-up rod).

Accelerating Pump: Discharge jet (twin) primary side only size No. 68 (.031 inch) drill. Intake ball check seat (screw plug) size .115 to .120 inch diameter. Discharge needle seat, size .070 inch diameter.

Choke: Carter Climatic® Control set 1 point rich. Butterfly type—offset choke valve, primary side only. Choke heat suction hole, restriction in body size No. 38 (.1015 inch), late prod. No. 44 (.086 inch) drill.

Vacuum Spark Port: Horizontal slot (round end) .055 x .130 inch. Top of port .040 to .050 inch above top edge of valve with valve tightly closed.

Motor Tune-Up—Be Accurate!

CAUTION: Change worn or leaky flange gaskets. Tighten manifold bolts and test compression before adjusting carbureter.

Spark Plug Gap	Breaker Point Setting	Ignition Timing Breaker Points to Open: 6° B. T. D. C. At Vibration Damper	Valve Setting (Hot)	Float Setting	Idle Adjustment Screw Setting
.032"-.036"	.014"-.016"		Intake .019" Exhaust .019"	5/32 Inch (Use Gauge T109-154)	1/2 to 1 1/2 Turns Open 475 to 500 R.P.M. In Neutral

Copyright © 1956
Copyright © 1957
by ACF Industries, Incorporated
All Rights Reserved

CARBURETER
TRADE MARK REG. U. S. PAT. OFF.
MARCA REGISTRADA

S S PRINTED IN U.S.A.

www.carburetor-parts.com

CARBURETOR ADJUSTMENTS

Adjustments Illustrated on Service Adjustment Procedure Form 3694

FLOAT ALIGNMENT: Side of floats parallel to edge of casting. Minimum clearance between lever and air horn lugs without binding. To adjust, bend float lever.

FLOAT LEVEL: 5/32 inch (Gauge T109-154) between top of floats at outer end and air horn gasket. To adjust, bend float lever.

FLOAT DROP: 23/32 inch between top of floats at outer end and air horn gasket. To adjust, bend stop tabs on floats brackets.

PUMP: 15/32 inch from the top of the bowl cover to the top of the plunger shaft with throttle connector rod in center hole (medium stroke) of pump arm.

COUNTERSHAFT LINKAGE: (1) .086 inch (Gauge T109-215) between choke lever and stop in piston housing with choke held closed. To adjust, take slack out of linkage by setting counter shaft lever.

(2) .010 inch (Gauge T109-200) between lug on outer countershaft lever and stop on inner countershaft lever. To adjust, bend lug on outer countershaft lever.

Optional adjustment (late prod.) with slight clearance between lug on fast idle cam and stop on flange casting, and inner countershaft lever contacting lug on outer countershaft lever align index mark on cam with adjusting screw. To adjust bend fast idle connector rod.

FAST IDLE THROTTLE VALVE CLEARANCE: .020 inch (Gauge T109-29) between lower edge of valve and bore with adjusting screw on high step of cam.

FAST IDLE ON CAR: 1800 to 2000 R.P.M. hot engine —with fast idle screw on high step of cam.

UNLOADER: .067 inch (Gauge T109-234) between upper edge of choke valve and inner wall of air horn. To adjust, bend unloader arm on throttle lever.

PRIMARY THROTTLE SHAFT DOG: (1) With primary throttle valves in wide open position there should be .015 inch (Gauge T109-44) clearance between edge of secondary valves and bore of carbureter adjacent to primary valves. To adjust, bend upper tang on primary throttle shaft dog. If clearance cannot be obtained, bend throttle operating rod slightly.

(2) With primary and secondary valves tightly closed there should be .067 inch (Gauge T109-234) clearance between primary throttle shaft flex spring and lower tang on primary throttle shaft dog. To adjust, bend lower tang.

DASH POT: 7/16 inch from top of the bowl cover to the top of the plunger shaft with primary throttle wide open. To adjust, bend stop lug on flat lever.

TOOLS REQUIRED FOR SERVICING CARBURETER:

T109-29	.020" Wire gauge
T109-44	.015" Wire gauge
T109-154	5/32" Float gauge
T109-200	.010" Wire gauge
T109-215	.086" Wire gauge
T109-234	.067" Wire gauge
T109-22	Bending tool
T109-213	Bending tool
T109-214	Bending tool

CARBURETER
TRADE MARK REG. U. S. PAT. OFF.
MARCA REGISTRADA

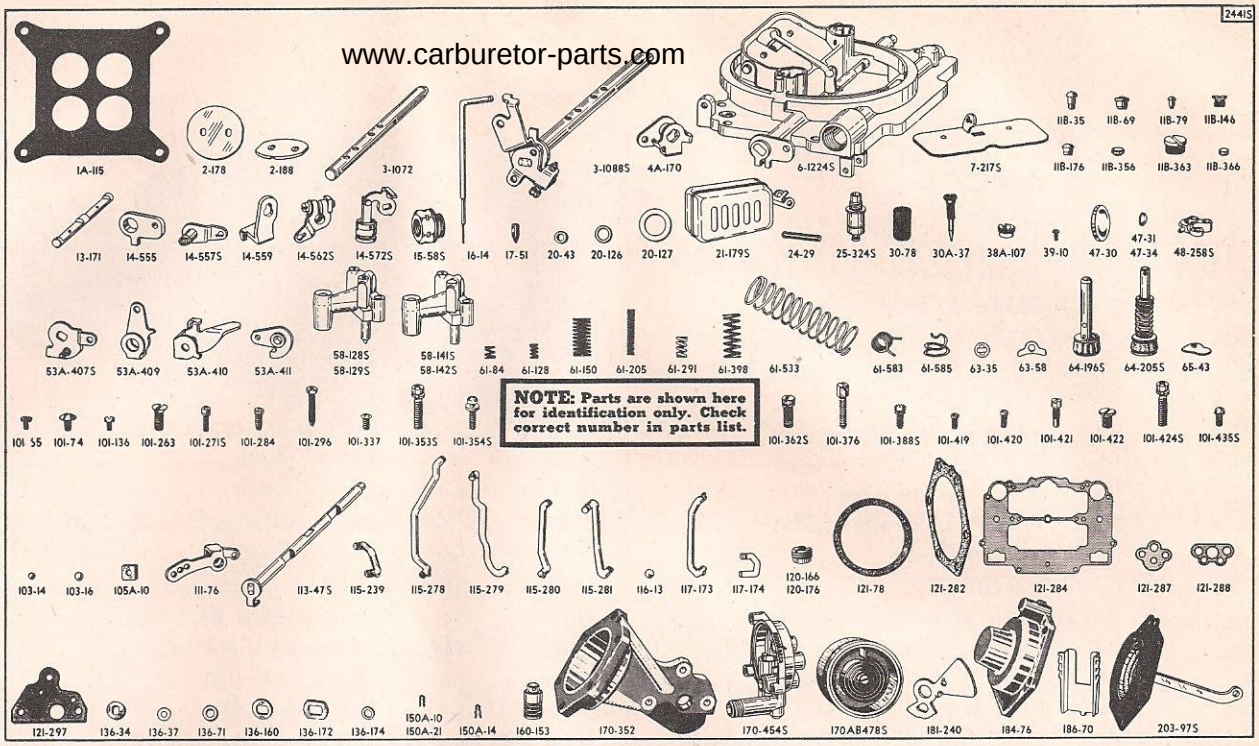

www.carburetor-parts.com

NOTE: Parts are shown here for identification only. Check correct number in parts list.

Ford—1957—Carbureters Nos. 2441S-2441SA

WHEN SERVICING, USE GASKET ASSORTMENT No. 292; REPAIR PACKAGE No. 1851

PART NAMES IN CAPITAL LETTERS, LISTED BELOW, INDICATE CONTENTS OF REPAIR PACKAGE

Part No.	PART NAME
1A-115	FLANGE GASKET
2-178	Secondary throttle valve (2)
2-188	Primary throttle valve (2)
3-1072	Secondary throttle shaft
3-1088S	Primary throttle shaft and lever assembly
4A-170	Primary throttle shaft dog
6-1224S	†Air horn assembly (2441S) (Sup. by 6-1304S)
6-1304S	Air horn assembly
7-217S	Choke valve and lever assembly
11B-35	Rivet plug
11B-69	Fuel passage plug (Sup. by 11B-306)
11B-79	Rivet plug (2)
11B-146	Level sight plug (Sup. by 11B-372)
11B-176	Idle port rivet plug (2)
11B-306	Fuel passage plug
11B-356	Secondary throttle shaft plug
11B-363	PUMP INTAKE SCREW PLUG
11B-366	Nozzle well rivet plug (4)
11B-372	Level sight plug (2)
13-171	Choke shaft
14-555	Inside countershaft lever
14-557S	Choke lever and shaft assembly (piston housing)
14-559	Countershaft lever (to choke valve)
14-562S	Countershaft lever, screw and nut assembly
14-572S	Choke piston, lever, link and pin assembly (Sup. by 14-581S, 150-190, 160-166)
14-581S	Choke piston link and lever assembly
15-58S	Fuel inlet fitting assembly

Part No.	PART NAME
16-14	Step-up rod .0725" x .063" (Sup. by 16-28) (2)
16-21	Step-up rod .0725" x .066" 1 size lean (2)
16-22	Step-up rod .07375" x .068" 2 sizes lean (2)
16-28	STEP-UP ROD .071" x .0635" (2)
17-51	PUMP DISCHARGE CHECK NEEDLE
20-43	PISTON HOUSING GASKET
20-126	Needle seat gasket (2)
20-127	FUEL INLET FITTING GASKET
21-179S	Float and lever assembly (2)
24-29	Float lever pin (2)
25-324S	NEEDLE AND SEAT ASSEMBLY (2)
30-78	FUEL INLET STRAINER
30A-37	Idle adjustment screw (2)
38A-107	PUMP INTAKE CHECK BALL SEAT
39-10	Choke valve attaching screw (2)
47-30	Piston housing welsh plug
47-31	Venturi welsh plug (Sup. by 47-33) (4)
47-33	Venturi welsh plug (4)
47-34	Spark port welsh plug
48-258S	Pump jet housing
53A-407S	Secondary throttle operating lever assembly
53A-409	Primary throttle operating lever
53A-410	Dash pot arm (inner)
53A-411	Dash pot arm (outer)
58-128S	†Primary venturi assembly (choke side) (2441S) (Sup. by 58-170S and 6-1304S)
58-129S	†Primary venturi assembly (pump side) (2441S) (Sup. by 58-171S and 6-1304S)
58-141S	Secondary venturi assembly (pump side)

www.carburetor-parts.com

Part No.	PART NAME
58-142S	Secondary venturi assembly (choke side)
58-170S	Primary venturi assembly (choke side) (Sup. by 58-179S)
58-171S	Primary venturi assembly (pump side) (Sup. by 58-180S)
58-179S	Primary venturi assembly (choke side)
58-180S	Primary venturi assembly (pump side)
61-84	Idle adjustment screw spring (2)
61-128	THROTTLE CONNECTOR ROD SPRING (Use with 115-278)
61-150	DASH POT RETURN SPRING
61-205	Vacuum piston spring (Sup. by 61-259) (2)
61-259	VACUUM PISTON SPRING (2)
61-291	Throttle lever adjusting screw spring
61-398	PUMP SPRING
61-533	Diaphragm return spring
61-583	Throttle flex spring
61-585	STEP-UP ROD RETAINING SPRING (2)
63-35	THROTTLE CONNECTOR ROD RETAINER (Use with 115-278)
63-58	Coil housing retainer (3)
64-196S	DASH POT PLUNGER, ROD AND CHECK ASSEMBLY
64-205S	PUMP PLUNGER, ROD AND SPRING ASSEMBLY
65-43	Step-up piston cover plate (2)
101-65	Piston housing choke shaft lever attaching screw
101-74	Throttle shaft lever attaching screw (2)
101-136	Coil housing attaching screw (3)
101-263	Diaphragm housing attaching screw (3)
101-271S	Pump jet housing attaching screw and washer assembly (Sup. by 101-184S) (2)
101-184S	Pump jet housing attaching screw and washer assembly (2)
101-284	Piston housing attaching screw (Sup. by 101-436) (3)
101-296	Fast idle adjustment screw
101-337	Countershaft lever attaching screw
101-353S	Air horn attaching screw and washer assembly (2)
101-354S	Countershaft lever clamp screw and washer assembly
101-362S	Air horn attaching screw and washer assembly (8)
101-376	Throttle lever adjusting screw
101-388S	Diaphragm housing cover attaching screw and washer assembly (6)
101-419	Secondary throttle valve attaching screw (4)
101-420	Primary throttle valve attaching screw (4)
101-421	Pump arm attaching screw
101-422	Fast idle cam attaching screw
101-424S	Venturi attaching screw and washer assembly (8)

Part No.	PART NAME
101-435S	Step-up piston cover plate attaching screw and washer assembly (2)
101-436	Piston housing attaching screw (3)
103-14	Lead shot
103-16	Lead shot (2)
105A-10	Countershaft lever clamp screw nut
111-76	Pump arm
113-47S	Countershaft and lever assembly
115-239	Throttle operating rod
115-278	THROTTLE CONNECTOR ROD (Sup. by 115-298 and 172-22)
115-279	Choke connector rod
115-280	Fast idle connector rod
115-281	Dash pot connector rod
115-298	Throttle connector rod
116-13	PUMP INTAKE CHECK BALL
117-173	Choke valve connector link
117-174	PUMP CONNECTOR LINK
120-166	PRIMARY METERING JET (2)
120-176	SECONDARY METERING JET (2)
121-78	COIL HOUSING GASKET
121-282	GASKET (DIAPHRAGM TO LOWER HOUSING)
121-284	AIR HORN GASKET
121-287	PUMP JET HOUSING GASKET
121-288	VENTURI CLUSTER GASKET (4)
121-297	DIAPHRAGM HOUSING TO FLANGE GASKET
136-34	Choke piston lever retaining washer
136-37	Throttle operating rod washer (5)
136-71	Dash pot lever retaining washer
136-160	Secondary throttle shaft washer
136-172	Primary throttle shaft washer
136-174	Throttle lever adjusting screw washer
150-190	Choke piston pin (Use with 14-581S)
150A-10	PIN SPRING (7)
150A-14	PIN SPRING
160-153	PIN SPRING
150A-21	Step-up piston (2)
160-166	Choke piston (Use with 14-581S)
170-352	Diaphragm housing
170-454S	Piston housing and plug assembly
170AB-478S	Thermostatic coil and housing assembly
172-22	Throttle connector rod retainer (Use with 115-298)
181-240	Fast idle cam
184-76	Diaphragm housing cap
186-70	Fuel bowl baffle (2)
203-97S	Secondary throttle shaft diaphragm assembly

† 244IS used on limited production.

NOTE: Figures in parentheses indicate number of pieces used in one carbureter. Where no figure is shown, only one is used.

CARBURETER
TRADE MARK REG. U. S. PAT. OFF.
MARCA REGISTRADA