03/93 TECHLIT CO.
Printed in U.S.A.

INSTRUCTION SHEET
CARTER AUTOMOTIVE
9000 SERIES MODEL AFB

50-728-2

DISASSEMBLY

The numerical sequence of the exploded view may be used as a guide to disassemble unit far enough to permit cleaning, inspection and installation of kit contents. Notice the holes from which linkage rods are removed so they can be returned to the same locations during reassembly. **CAUTION:** If choke or throttle shaft requires removal, the attaching valve screws are staked over and the staking must be filed off before screws are turned.

CLEANING

Clean all parts in an approved cleaning solvent. Special attention should be given to carbon deposits in throttle bore and passages. Rinse parts in suitable solvent. Blow out all passages with compressed air. Do not soak leather, rubber or similar material in solvent.

REASSEMBLY

Reverse the numerical sequence using reference numbers shown in exploded view as a guide and note the following special instructions:

1. Idle mixture screw (43) should be seated lightly and then backed out two turns for the initial setting. Refer to manufacturer's service manual for proper idle and fast idle final adjustment on the engine.
2. Vacuum piston springs (6), vacuum piston (5) and metering rod assemblies (3, 4) should be installed after bowl cover (20) has been attached to body.
3. Mark venturi assemblies (30, 34) before removal so they can be reinstalled in their proper location.
4. Be sure the fuel baffles on the bowl cover slide down in front of baffle plates (28) in fuel bowl.
5. Install open end of "S" link (14) toward choke valve. Link should read "S" from front of carb.
6. When installing bowl cover (20), guide brass bleed tubes on primary venturi through the bowl cover.
7. Apply a light film of lubricant to cup of plunger assembly (25) before installing.
8. After completion of all adjustments, be sure throttle valves move freely from wide open to closed position.

GENERAL EXPLODED VIEW

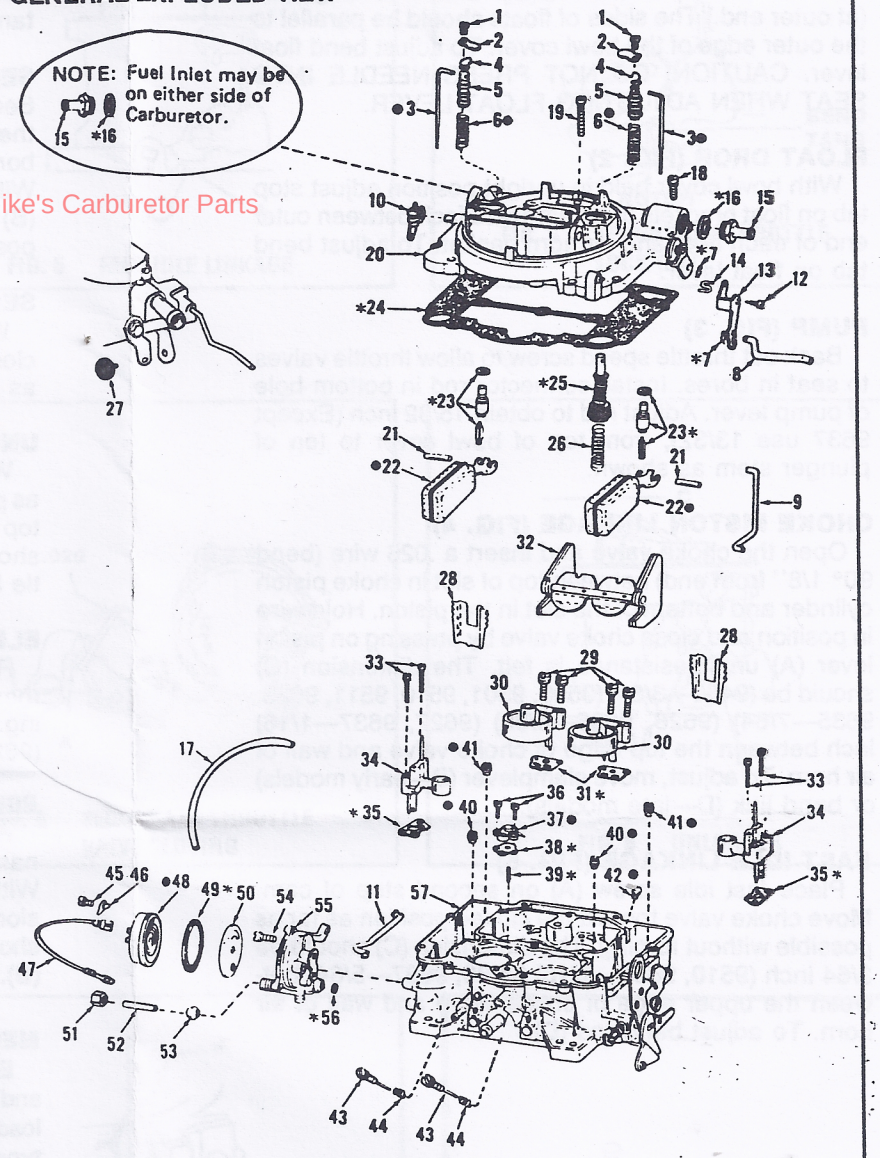

NOMENCLATURE

	1. Cover plate screw	(2)
	2. Cover plate	(2)
•	3. Step-up rod	(2)
	4. Step-up rod retainer spring	(2)
	5. Step-up piston	(2)
•	6. Vacuum piston spring	(2)
*	7. Pin spring	(2)
	8. Pump connector rod	
	9. Fast idle cam connector rod	
	10. Countershaft lever	
	11. Choke connector rod	
	12. Pump lever screw	
	13. Pump lever	
	14. Pump "S" link	
	15. Fuel inlet fitting	
*	16. Fuel inlet fitting gasket	
	17. 3/16" Fresh air choke hose	
	18. Bowl cover screw	(8)
	19. Bowl cover screw	(2)
	20. Bowl cover	
	21. Float pin	(2)
•	22. Float	(2)
*	23. Needle and seat assembly	(2)
*	24. Bowl cover gasket	
*	25. Plunger assembly	
	26. Lower plunger spring	
	27. Vent valve	
	28. Float bowl baffle	(2)
	29. Secondary venturi assy. screw	(4)
	30. Secondary venturi assembly	(2)
*	31. Secondary venturi assy. gasket	(2)
	32. Auxiliary valves and shaft	
	33. Primary venturi assembly screw	(4)
	34. Primary venturi assembly	(2)
*	35. Primary venturi assembly gasket	(2)
	36. Pump jet housing screw	(2)
•	37. Pump jet housing	
*	38. Pump jet gasket	
*	39. Pump discharge check needle	
•	40. Primary metering jet	(2)
•	41. Secondary metering jet	(2)
•	42. Pump intake check jet	
	43. Idle mixture screw	(2)
	44. Idle mixture screw spring	(2)
	45. Coil housing retainer screw	(3)
	46. Coil housing retainer	(3)
	47. Choke ground wire (black)	
•	48. Coil housing	
*	49. Coil housing gasket	
	50. Baffle plate	
	51. 1/4" Compression nut	
	52. 1/4" Fresh air choke tube	
	53. 1/4" Compression ferrule	
	54. Piston housing attaching screw	(3)
	55. Piston housing	
*	56. Piston housing gasket	
	57. Throttle body casting	

* Indicates parts contained in Re-Carb Kit.

• Only these parts can be purchased separately. Refer to Service Parts Catalog 3880 for proper application.

ADJUSTMENTS

FLOAT LEVEL (FIG. 1)
With bowl cover inverted, bowl cover gasket in place, and weight of float seating needle, there should be 5/16 inch between top of each float and bowl cover gasket (at outer end.) The sides of floats should be parallel to the outer edge of the bowl cover. To adjust bend float lever. CAUTION! DO NOT PRESS NEEDLE INTO SEAT WHEN ADJUSTING FLOAT LEVER.

FLOAT DROP (FIG. 2)
With bowl cover held in upright position adjust stop tab on float brackets to obtain 15/16 inch between outer end of each float and air horn gasket. To adjust bend tab on float lever.

PUMP (FIG. 3)
Back out throttle speed screw to allow throttle valves to seat in bores. Install connector rod in bottom hole of pump lever. Adjust rod to obtain 15/32 inch (Except 9637 use 13/32), from top of bowl cover to top of plunger stem as shown.

CHOKE PISTON LINKAGE (FIG. 4)
Open the choke valve and insert a .026 wire (bend 90° 1/8'' from end) between top of slot in choke piston cylinder and bottom of the slot in the piston. Hold wire in position and close choke valve by pressing on piston lever (A) until resistance is felt. The dimension (C) should be (9400—3/64) (9500, 9501, 9510, 9511, 9625, 9635—7/64) (9626, 9636—3/32) (9627, 9637—1/16) inch between the top edge of choke valve and wall of air horn. To adjust, move clamplever (B—early models) or bend link (D—late models).

FAST IDLE LINKAGE (FIG. 5)
Place fast idle screw (A) on second step of cam. Move choke valve toward the closed position as far as possible without forcing. The dimension (C) should be 3/64 inch (9510, 9635—1/16) (9626, 9637—5/64) between the upper edge of choke valve and wall of air horn. To adjust bend rod (D).

SECONDARY THROTTLE LOCK OUT (FIG. 6)
Crack throttle valves and manually open and close the choke valve. Tang on secondary throttle should freely engage in notch of lock out dog. To adjust bend tang on secondary throttle lever.

SECONDARY THROTTLE VALVE OPENING (FIG. 7)
Secondary throttle valves should just start to open when there is 11/32 inch between primary throttle valve and bore of carburetor as shown to adjust bend rod. (A). With primary throttle valves wide open adjust stop tang (B) until secondary valves are 5° before full vertical position.

Mike's Carburetor Parts

SECONDARY THROTTLE VALVE CLOSING (FIG. 8)
With primary and secondary throttle valves tightly closed, there should be .020 clearance between levers as shown. To adjust bend shoe on lever (A).

UNLOADER (FIG. 9)
With throttle valves open, close choke valve as far as possible without forcing. The dimension (C) between top edge of choke valve and inner wall of air horn should be 1/4 inch. To adjust, bend tang (D) on throttle lever.

ELECTRIC CHOKE SETTING (FIG. 10)
Rotate cover against spring tension until mark on thermostat cover is aligned with index mark on housing. Turn clockwise an additional two notches rich (9627, 9637—3 notches rich) for proper setting.

BOWL VENT (FIG.11)
Remove plug (A) from hole in airhorn and insert a narrow ruler. Allow ruler to rest lightly on top of valve. With throttle valves closed and choke open, the dimension from the top of the valve to top of hole in casting should be 3/4 inch. To adjust bend valve operating lever (B).

NEEDLE AND SEAT ASSEMBLY (FIG. 12)
Early AFB's use rubber-tipped needles with solid bodies and a screen at the inlet fitting. Later AFB's use spring-loaded needles and screens fitted to the seat body. Both types are in this kit. Use the one duplicating original parts. Float setting for both styles is 5/16" (+/— 1/64").

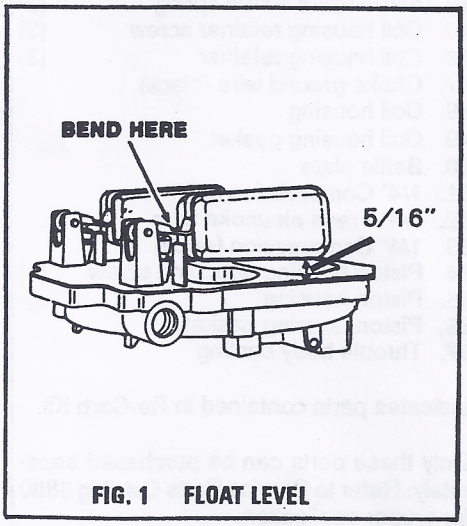

FIG. 1 FLOAT LEVEL

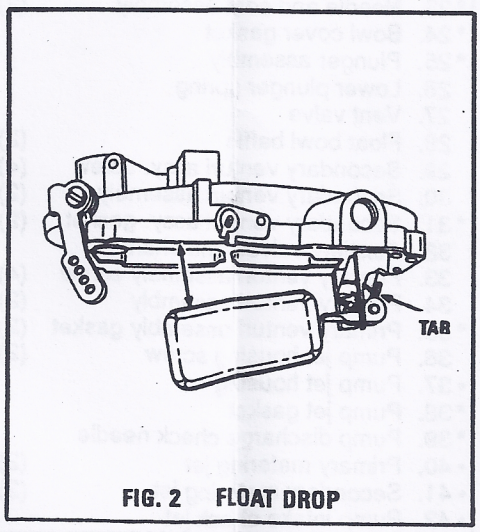

FIG. 2 FLOAT DROP

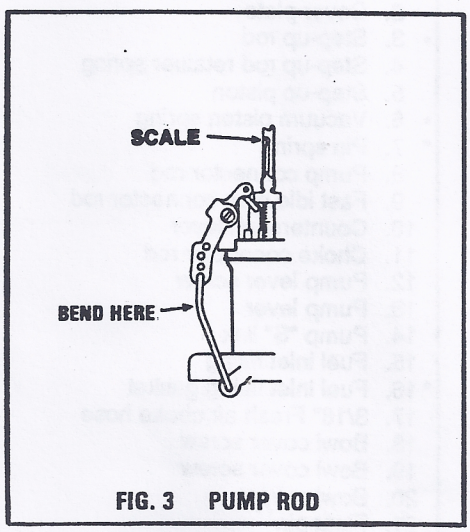

FIG. 3 PUMP ROD

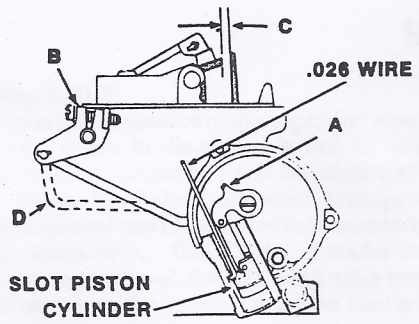

FIG. 4 CHOKE PISTON LINKAGE

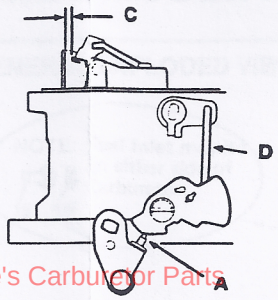

Mike's Carburetor Parts

FIG. 5 FAST IDLE LINKAGE

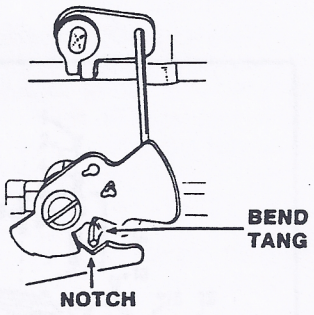

FIG. 6 SECONDARY THROTTLE LOCK OUT

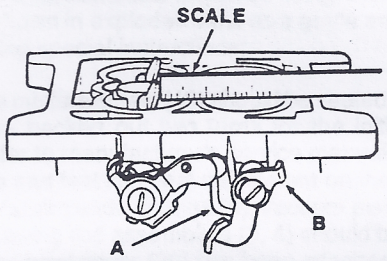

FIG. 7 SECONDARY THROTTLE VALVE OPENING

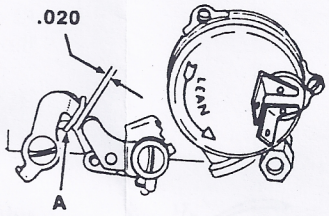

FIG. 8 SECONDARY THROTTLE VALVE CLOSING

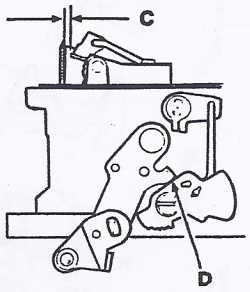

FIG. 9 UNLOADER

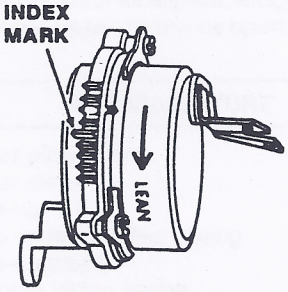

FIG. 10 ELECTRIC CHOKE SETTING

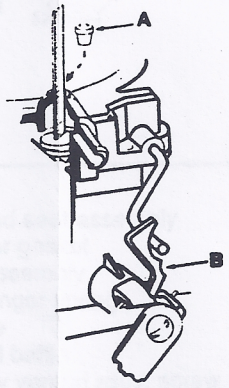

FIG. 11 BOWL VENT TYPE II

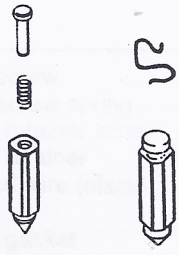

FIG. 12 NEEDLES