Form 5173E

CARTER CARBURETOR
DIVISION OF ACF INDUSTRIES INCORPORATED
ST. LOUIS, MO., U. S. A.

CHRYSLER 2314S-2314SA
January, 1956
Revised April, 1959

MODELS
C-70, C-72, C-73
Power Flite Transmission

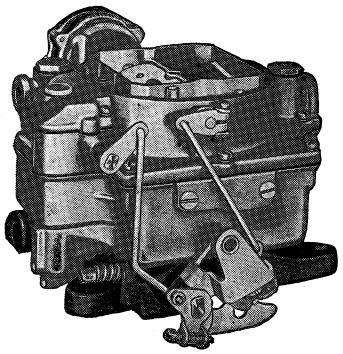

CHRYSLER "V-8" 1956

WCFB Four-Bore Down-Draft Climatic® Control **Carbureters Nos. 2314S-2314SA**

CARBURETER SPECIFICATIONS

For Chrysler 8 Cylinder Engine: 3.94 Inch Bore, 3.63 Inch Stroke

Dimensions: Flange size, 1¼ inch Four Bore—4 bolt type.
Primary venturi size, 11/32 inch I. D.
Main venturi size, 1-3/16 inch I. D.

Vents: Outside, (4). Inside, (5).

Gasoline Intake: Size No. 42 (.0935 inch) drill hole in needle seat.

Low Speed Jet Tube: Jet, (4) size .035 inch diameter.
By-Pass, in body, (4) size No. 52 (.0635 inch) drill.
Economizer, (4) size .0452 inch diameter.
Idle bleed, (4) in body, size No. 52 (.0635 inch) drill.

Idle Port: Upper, slot type. Primary, length .175 inch; width .030 inch. Secondary, length .101 inch; width .030 inch.

Idle Port Opening: Primary, .130 to .134 inch above top edge of valve with valve tightly closed. Secondary, .071 to .077 inch.

Lower Port: Primary (for idle adjustment screw), size No. 53 (.0595 inch) drill. Secondary, constant feed, size .040 inch diameter.

Set Idle Adjustment Screw: 1 to 2 turns open. For richer mixture turn screw out. Do not idle engine below 500 R.P.M. in neutral.

Main Nozzle: Installed permanently. DO NOT REMOVE. Anti-percolating jet (to nozzle well), primary side, (to idle well) secondary side, size No. 70 (.028 inch) drill.

Metering Rod: Primary, economy step .075 inch diameter. Middle step tapers to .065 inch diameter. Power step .042 inch diameter. Secondary, none.

Metering Rod Jet: Primary, size .096 inch diameter (for metering rod).
Secondary, size .061 inch diameter (no metering rod).

Accelerating Pump: Discharge jet (twin) primary side only, size No. 74 (.0225 inch) drill.
Intake ball check seat, size .115 to .120 inch diameter.
Discharge needle seat, size .070 inch diameter.
Relief passage (vent) to fuel chamber No. 42 (.0935 inch) drill.
Discharge relief plug, size No. 55 (.052 inch) drill.

Choke: Carter Climatic® Control, set one point rich. Butterfly type, offset choke valve, primary side only. Choke heat suction hole, restriction in piston housing, size No. 47 (.0785 inch) drill.

Vacuum Spark Port: Horizontal slot (round end) .045 by .110 inch. Top of port .032 to .042 inch above valve with valve tightly closed.

Motor Tune-Up—Be Accurate!

CAUTION: Change worn or leaky flange gaskets. Tighten manifold bolts and test compression before adjusting carbureter.

Spark Plug Gap .035"	Breaker Point Setting .017"	Ignition Timing Breaker Points to Open: 4° B. T. C. At Vibration Damper	Float Setting Primary 5/32 Inch (Use Gauge T109-236) Secondary 7/32 Inch (Use Gauge T109-283)	Idle Adjustment Screw Setting 1 to 2 Turns Open Idle Engine at 500 R.P.M. In Neutral

NOTE: These cars are equipped with Hydraulic Valve Lifters—NO ADJUSTMENT.

Copyright © 1956
by Carter Carburetor Corporation
Copyright © 1959
by ACF Industries, Incorporated
All Rights Reserved

CARBURETER
TRADE MARK REG. U. S. PAT. OFF.
MARCA REGISTRADA

S S PRINTED IN U.S.A.

CARBURETER ADJUSTMENTS

FLOAT ADJUSTMENT: Two separate float adjustments must be made—lateral and vertical. **Lateral Adjustment:** Side of floats should just clear the vertical uprights of float gauge. Adjustment should be made by bending arms of floats. **Vertical Adjustment:** With bowl gasket removed, vertical distance between top of float and machined surface of casting must be 5/32 inch (gauge T109-236) for primary floats; and 7/32 inch (gauge T109-283) for secondary floats. Adjust by bending float arms.

FLOAT DROP ADJUSTMENT: With bowl cover held in upright position and measuring from center of floats, the distance between top of floats and bowl cover should be 21/32 inch for primary floats and 23/32 inch for secondary floats. Adjust by bending stop tabs on float bracket.

PUMP ADJUSTMENT: Install pump connector link in outer hole (long stroke) of pump arm, with ends extending outward toward countershaft arm. Back out throttle lever set screw until throttle valves seat in bores of carbureter. Hold straight edge across top of dust cover boss at pump arm. The flat on top of pump arm should be parallel to straight edge. Adjust by bending throttle connector rod at lower angle. (Use tool T109-213.)

METERING ROD ADJUSTMENT: Metering rod adjustment must be made after pump adjustment. 1. Back out throttle lever set screw to allow throttle valves to seat in bores of carbureter and loosen metering rod arm clamp screw. 2. With metering rods in place, press down on vacumeter link until metering rods bottom in carbureter body casting. 3. Holding rods in downward position and throttle valves seated, revolve metering rod arm until finger on arm contacts lip of vacumeter link. Hold in place and carefully tighten clamp screw.

BOWL VAPOR VENT ADJUSTMENT: This adjustment should be made after completing pump and metering rod adjustments. Install dust cover and dust cover gasket. Back out throttle lever set screw to allow throttle valves to seat in bores of carbureter. There should be 1/16 inch (gauge T109-197) between lower edge of bowl vapor vent valve and dust cover. To adjust, remove dust cover and bend vapor vent arm.

FAST IDLE ADJUSTMENT: (a) Loosen choke lever clamp screw on choke shaft. Insert .020 inch wire gauge (T109-29) between lip of fast idle cam and boss of flange casting. Hold choke valve tightly closed and take slack out of linkage by pressing choke lever towards closed position—hold in place and tighten clamp screw. (b) With choke valve tightly closed, tighten fast idle adjusting screw until there is .012 inch (gauge T109-200) opening between throttle valve and bore of carbureter, side opposite idle port. Be sure fast idle adjusting screw is on high step of cam while making this adjustment.

UNLOADER ADJUSTMENT: With throttle wide open there should be 3/16 inch (gauge T109-28) clearance between upper edge of choke valve and inner wall of air horn. Adjust by bending unloader lip on throttle shaft lever (use bending tool T109-41).

SECONDARY THROTTLE LOCK-OUT ADJUSTMENT: This adjustment should be made after completing fast idle adjustment. Crack throttle valves and hold choke valve tightly closed. Then close throttle. Tang on secondary throttle lever should freely engage in notch of lock-out dog. If necessary to adjust, bend tang on secondary throttle lever.

PRIMARY THROTTLE SHAFT DOG ADJUSTMENT:

Block choke valve wide open.

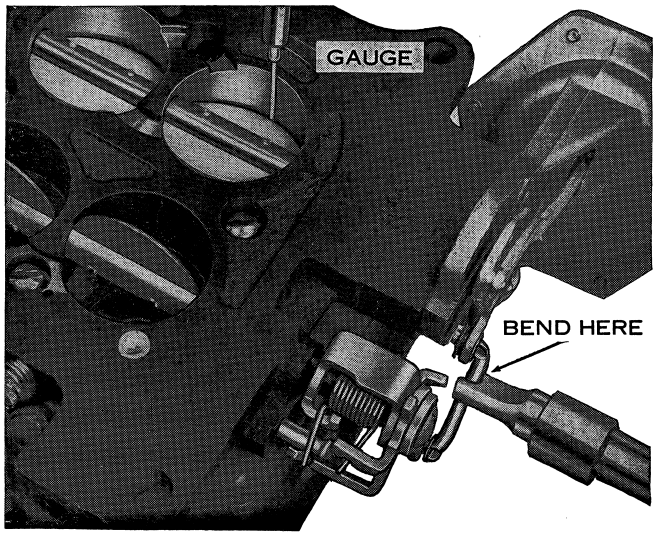

Figure 1

With primary throttle valves in wide open position, adjust (use tool T109-213) secondary operating rod so there is .054" to .064" clearance (gauge T109-193) between upper edge of secondary throttle valves (next to idle port) and bore of carbureter (Fig. 1).

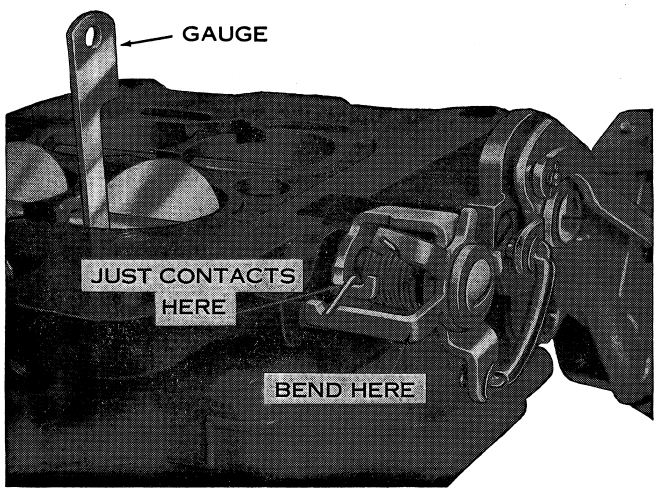

Figure 2

Place 1/4" gauge (tool T109-31) between upper edge of primary throttle valve and bore (next to idle port) and adjust (use tool T109-214) long tang on primary throttle shaft dog so that inner arm of spring just contacts inner lug of secondary operating lever and secondary throttle valves just start to open (Fig. 2).

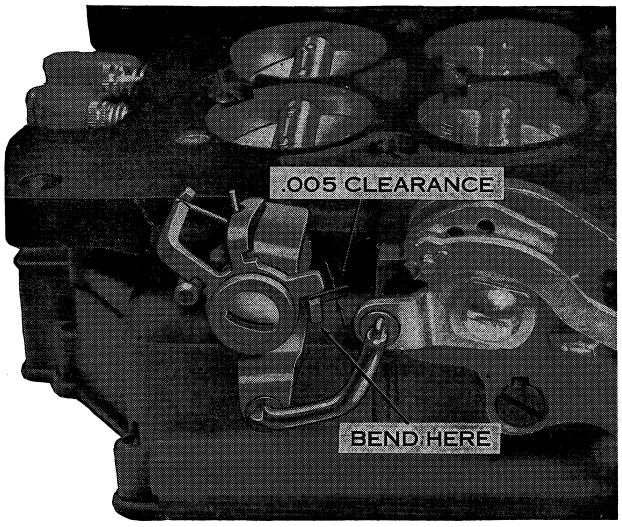

Figure 3

With primary and secondary throttle valves tightly seated, there should be .005" clearance (gauge T109-237) between outer lip on secondary operating lever and stop lug on primary throttle shaft dog.

TO ADJUST: Bend outer lip on secondary operating lever (use tool T109-214).

CAUTION: After bending, be sure secondary operating lever operates freely and does not bind in any position (Fig. 3).

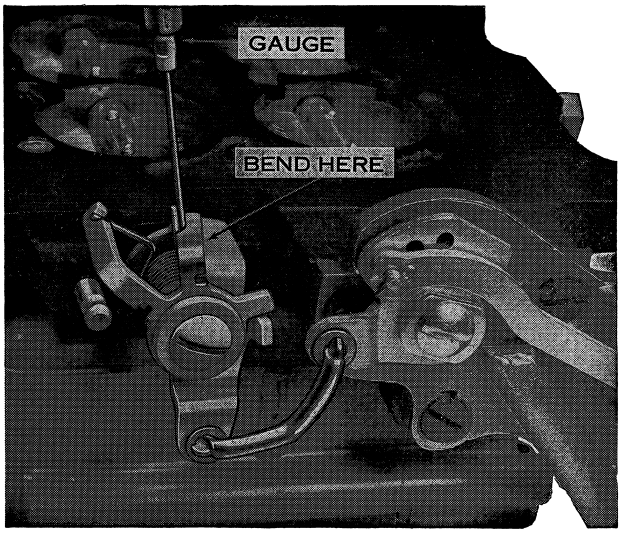

Figure 4

With primary and secondary throttle valves tightly closed, there should be .040" clearance (gauge T109-193) between short tang on primary throttle shaft dog and outer arm of spring.

TO ADJUST: Bend short tang on primary throttle shaft dog (use tool T109-214) (Fig. 4).

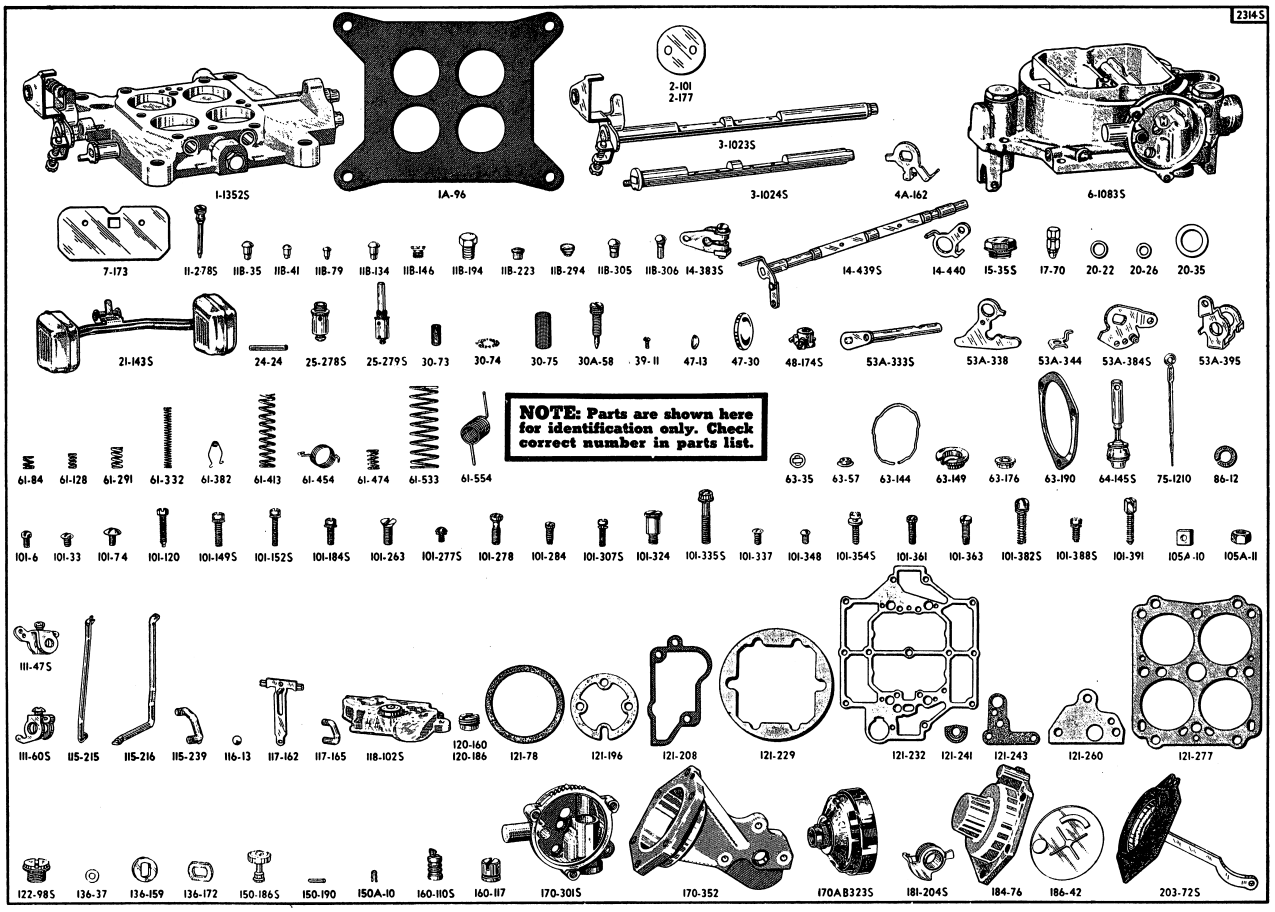

Chrysler "V-8"—1956—Carbureters Nos. 2314S-2314SA

(See Page 4 for above parts group identification.)

Chrysler "V-8"—1956—Carbureters Nos. 2314S-2314SA

WHEN SERVICING, USE GASKET ASSORTMENT No. 282A; RE-CARBURETION KIT No. 1834N; ZIP KIT No. 900-25

PART NAMES IN CAPITAL LETTERS, LISTED BELOW, INDICATE CONTENTS OF RE-CARBURETION KIT

Part No.	PART NAME
1-1352S	Body flange assembly
1A-96	Flange gasket (Use 1A-103)
1A-103	FLANGE GASKET
2-101	Primary throttle valve (2)
2-177	Secondary throttle valve (2)
3-1023S	Primary throttle shaft and lever assembly
3-1024S	Secondary throttle shaft and dog assembly
4A-162	Primary throttle shaft dog
6-1083S	Air horn assembly (Casting No. 6-1020)
6-1174S	Air horn assembly (Casting No. 6-1147)
7-173	Choke valve
11-278S	Low speed jet assembly (4)
11B-35	Rivet plug (4)
11B-41	Rivet plug (6-1083S (2), (6-1174S (1)
11B-79	Rivet plug (early prod. (4), (late prod. (1)
11B-134	Rivet plug
11B-146	Level sight plug (2)
11B-194	Pipe plug
11B-223	Nozzle passage rivet plug (4)
11B-294	Idle port rivet plug (4)
11B-305	Rivet plug (6-1083S (1), (6-1174S (2)
11B-306	Rivet plug (6-1083S (2), (6-1174S (1)
14-383S	Choke lever and screw assembly
14-439S	Choke piston lever, link and shaft assembly
14-440	Cam trip lever
15-35S	Strainer nut assembly (2)
17-70	Pump check needle
20-22	Needle seat gasket (2)
20-26	Pump relief plug gasket
20-35	Bowl strainer gasket (2)
21-143S	Float and lever assembly (2)
24-24	Float lever pin (2)
25-278S	PRIMARY NEEDLE AND SEAT ASSEMBLY
25-279S	SECONDARY NEEDLE AND SEAT ASSEMBLY
30-73	Primary needle seat strainer
30-74	Secondary fuel inlet strainer
30-75	Bowl strainer
30A-58	Idle adjustment screw (2)
39-11	Choke valve attaching screw (2)
47-13	Welsh plug (spark port passage)
47-30	Welsh plug (choke housing)
48-174S	Pump jet and housing assembly
53A-333S	Pump operating lever and countershaft assembly
53A-338	Lockout arm
53A-344	Vent arm
53A-384S	Secondary throttle operating lever assembly
53A-395	Primary throttle operating lever
61-84	Idle adjustment screw spring (2)
61-128	Connector rod spring
61-291	Throttle adjusting screw spring
61-332	VACUUM PISTON SPRING
61-382	Metering rod spring
61-413	Upper pump spring
61-454	Fast idle cam spring
61-474	Bowl vent spring
61-533	Diaphragm return spring
61-554	Throttle flex spring
63-35	Connector rod spring retainer
63-57	Intake check ball retainer
63-144	Delayer plate retainer ring
63-149	Bowl vent spring retainer
63-176	Pump spring retainer
63-190	Coil housing retainer
64-145S	PUMP PLUNGER AND ROD ASSEMBLY
75-1180	Metering rod—1 size lean (2)
75-1181	Metering rod—2 sizes lean (2)
75-1210	Metering rod—standard (2314S) (Use 75-1263) (2)
75-1263	METERING ROD—STANDARD (2)
75-1278	Metering rod—1 size rich (2)
86-12	Flange stud lock washer (4)
101-6	Pump arm clamp screw
101-33	Metering rod arm clamp screw
101-74	Throttle shaft screw (2)
101-120	Fast idle adjustment screw
101-149S	Body flange attaching screw and washer assembly
101-152S	Air horn attaching screw and washer assembly
101-184S	Dust cover attaching screw and washer assembly (2)
101-263	Diaphragm housing attaching screw (3)
101-275	Piston housing attaching screw (Use with 6-1174S)
101-277S	Vent arm attaching screw and washer assembly
101-278	Pump jet housing attaching screw
101-284	Piston housing attaching screw (6-1083S) (2)
101-307S	Air horn attaching screw and washer assembly (8)
101-324	Fast idle cam attaching screw
101-335S	Air horn attaching screw and washer assembly (7)
101-337	Secondary throttle valve attaching screw (4)
101-348	Primary throttle valve attaching screw (4)
101-354S	Choke lever clamp screw assembly
101-361	Coil housing attaching screw (3)
101-363	Piston housing attaching screw (6-1083S (1), (6-1174S (2)
101-382S	Body flange attaching screw and washer assembly (3)
101-388S	Diaphragm housing cover attaching screw and washer assembly (6)
101-391	Throttle lever adjusting screw
103-14	Lead shot (late prod.) (3)
105A-10	Choke lever clamp screw nut
105A-11	Flange stud nut (4)
111-47S	Pump arm and screw assembly
111-60S	Metering rod arm and screw assembly
115-215	Choke connector rod
115-216	Throttle connector rod (Use 115-310 and 172-22)
115-239	Throttle operating rod
115-310	Throttle connector rod
116-13	Pump intake check ball
117-162	Vacumeter piston link
117-165	Pump connector link
118-102S	Dust cover assembly
120-160	PRIMARY METERING ROD JET (2)
120-186	Secondary metering jet (2)
121-78	COIL HOUSING GASKET
121-196	Delayer plate gasket (2314S)
121-208	DUST COVER GASKET
121-229	AIR CLEANER GASKET
121-232	AIR HORN GASKET
121-241	PUMP JET HOUSING GASKET
121-243	Piston housing gasket (Use with 6-1083S)
121-256	Body flange gasket (Use 121-277)
121-260	Diaphragm housing gasket (Use 121-297)
121-277	BODY FLANGE GASKET
121-282	Gasket (diaphragm to lower housing)
121-283	Piston housing gasket (Use with 6-1174S)
121-297	Diaphragm housing gasket
122-98S	Pump relief plug assembly
136-37	Throttle connector rod and operating rod washer (5)
136-159	Primary throttle shaft washer
136-172	Secondary throttle shaft washer
150-186S	Pin and valve cap assembly
150-190	Choke piston pin
150A-10	Pin spring (5)
160-110S	Vacuum piston and pin assembly
160-117	Choke piston
170-301S	Piston housing and plug assembly (2314S) (Use 170-424S)
170-352	Diaphragm housing
170-424S	Piston housing and plug assembly (Use with 6-1083S)
170-443S	Piston housing and plug assembly (Use with 6-1174S)
170AB323S	Thermostatic coil and housing assembly (2314S) (Use 170AB-426S)
170AB-426S	Thermostatic coil and housing assembly
172-22	Throttle connector rod retainer (Use with 115-310)
181-204S	Fast idle cam assembly
184-76	Diaphragm housing cap
186-42	Choke baffle plate
203-72S	Secondary throttle shaft diaphragm assembly

NOTE: Figures in parentheses indicate number of pieces used in one carbureter. Where no figure is shown, only one is used.